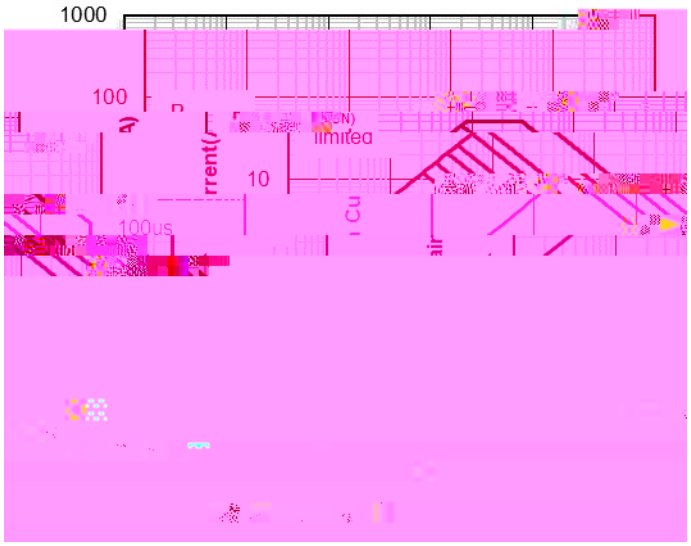
1000
100
10
limited
100us

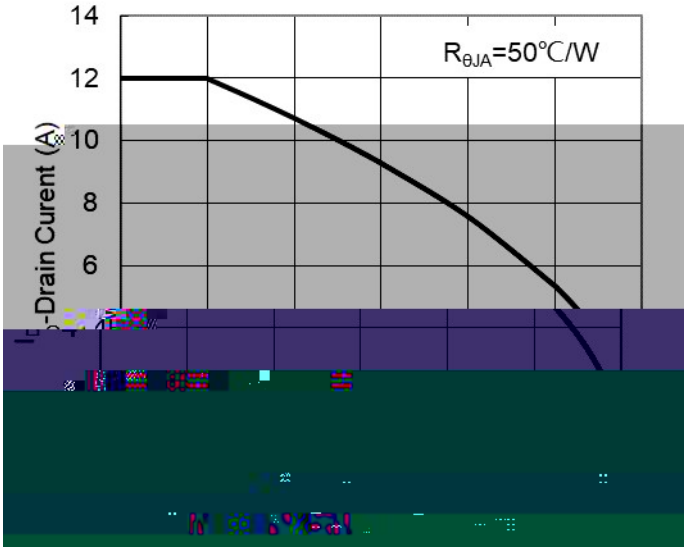
14
12
10
8
6
$R_{\theta JA}$=50℃/W
-Drain Curent (A)

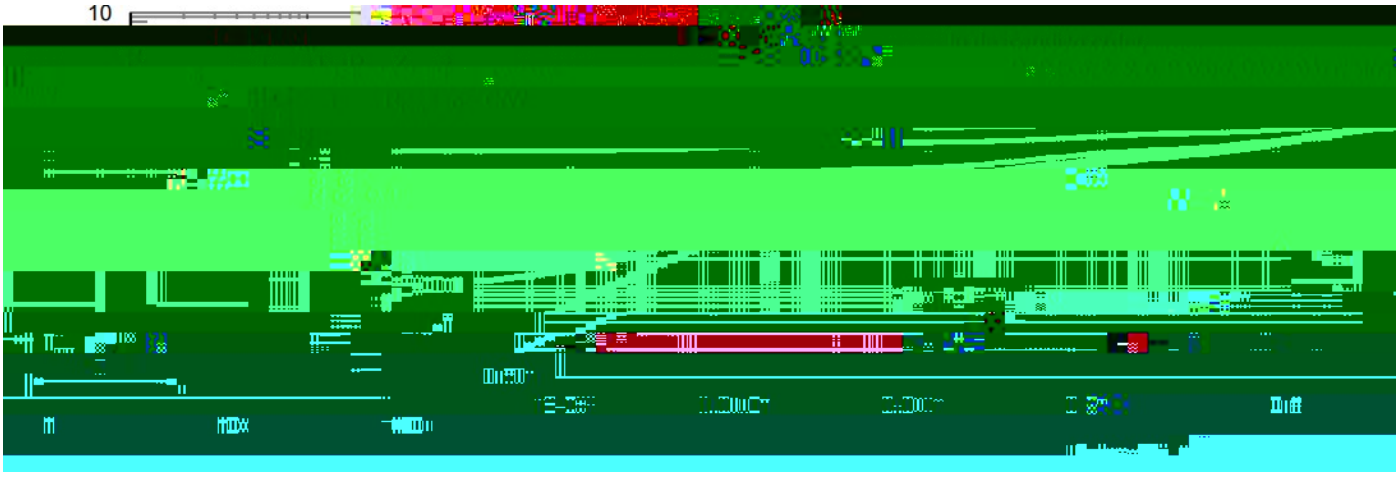
10

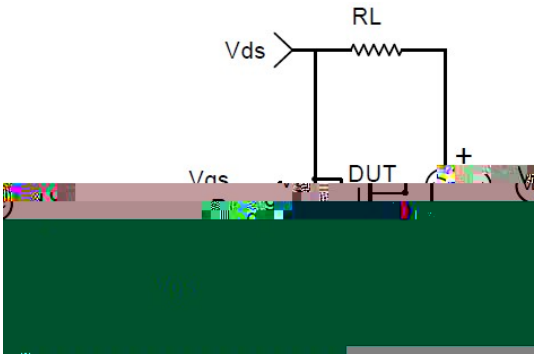
RL
Vds
DUT
+

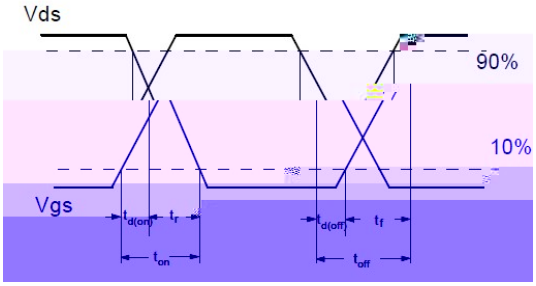
Vds
90%
10%
Vgs
$t_{d(on)}$
t_r
$t_{d(off)}$
t_f
t_{on}
t_{off}

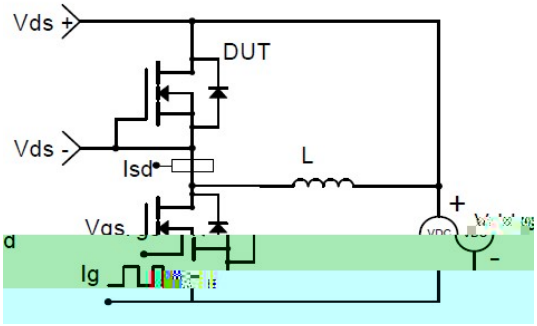
Vds +
DUT
Vds -
Isd
L
Vgs
Ig
+
-

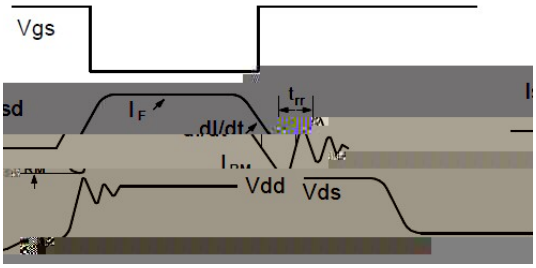
Vgs
I_F
t_{rr}
dI/dt
Vdd
Vds

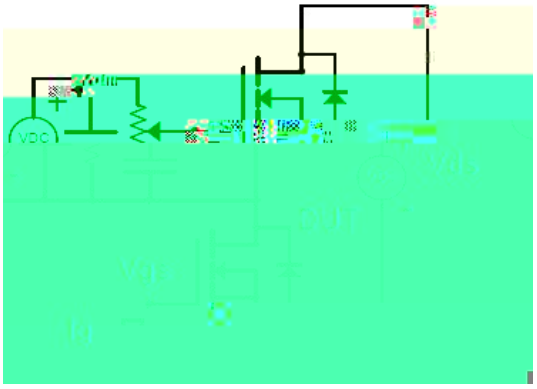
VDC
DUT
Vgs

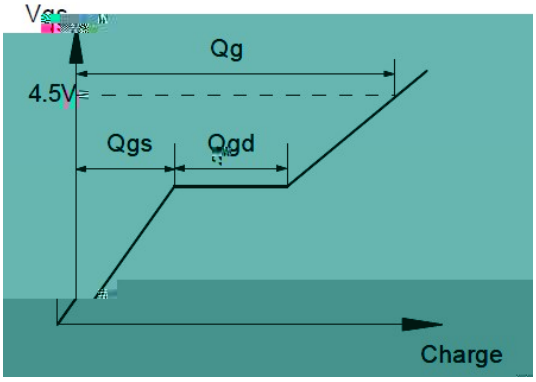
Qg
4.5V
Qgs
Qgd
Charge

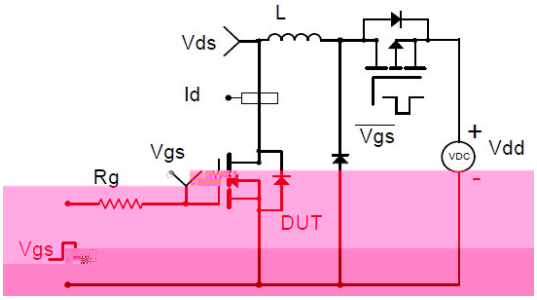
L
Vds
Id
Vgs
Rg
DUT
Vgs
+
Vdd
-

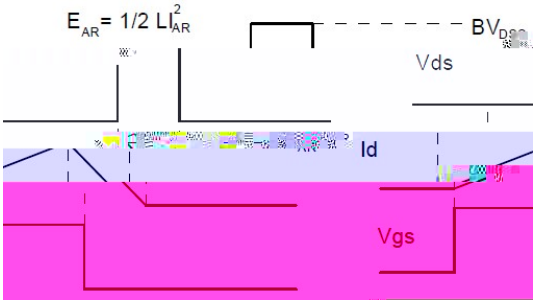
E_{AR}= 1/2 LI_{AR}^2
BV_{DSS}
Vds
Id
Vgs

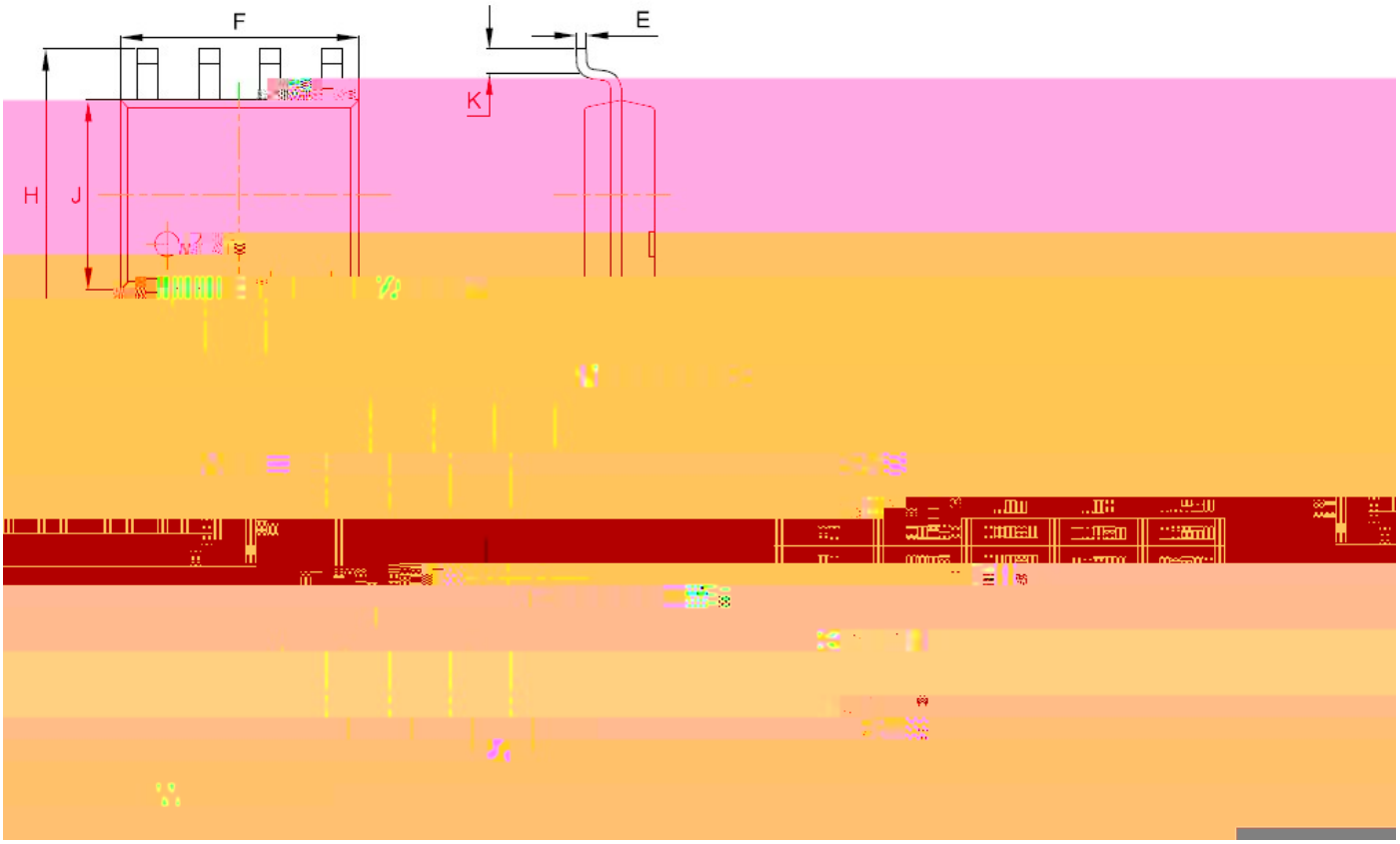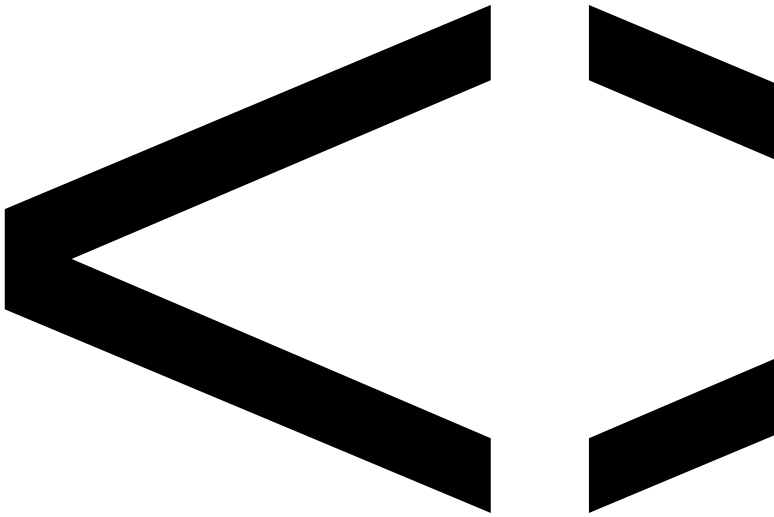
F
E
K
H
J