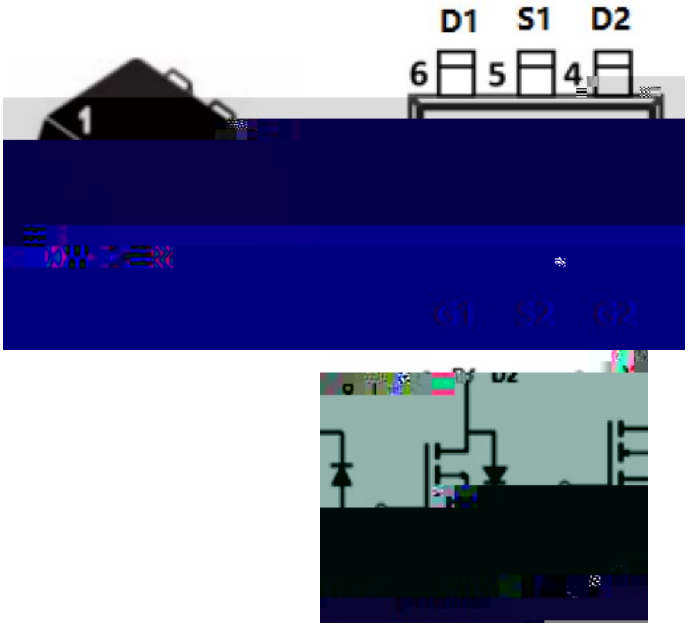
D1
S1
D2
6
5
4
1
G1
S2
G2

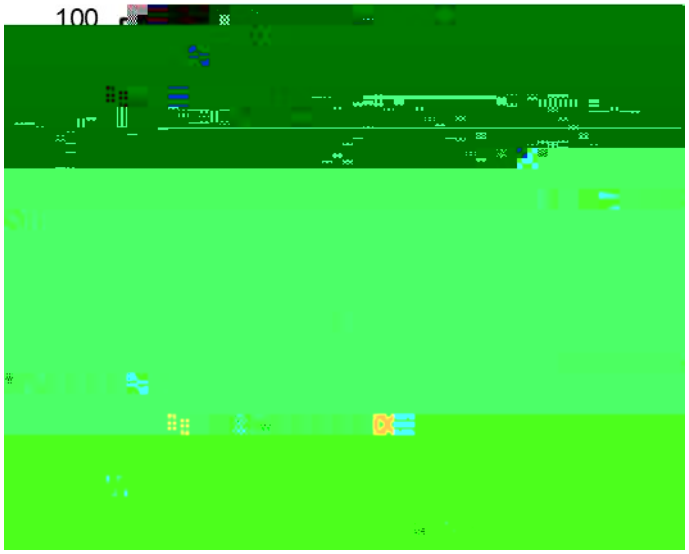
100

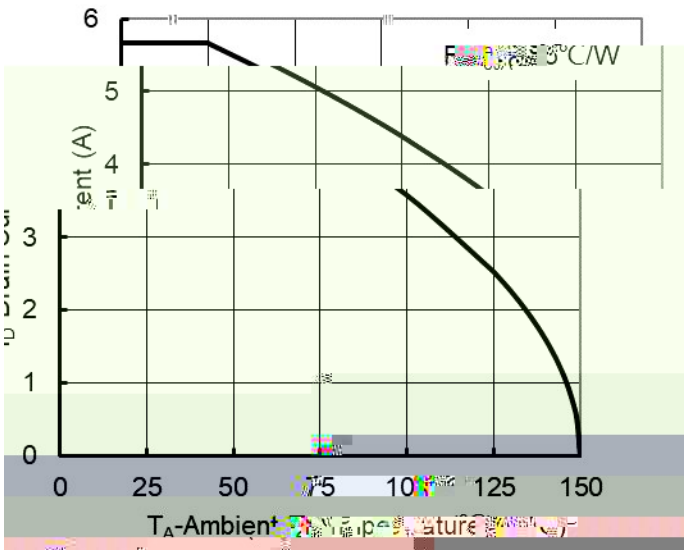
6
5
4
3
2
1
0
0
25
50
75
100
125
150
ent (A)
TA-Ambient Temperature

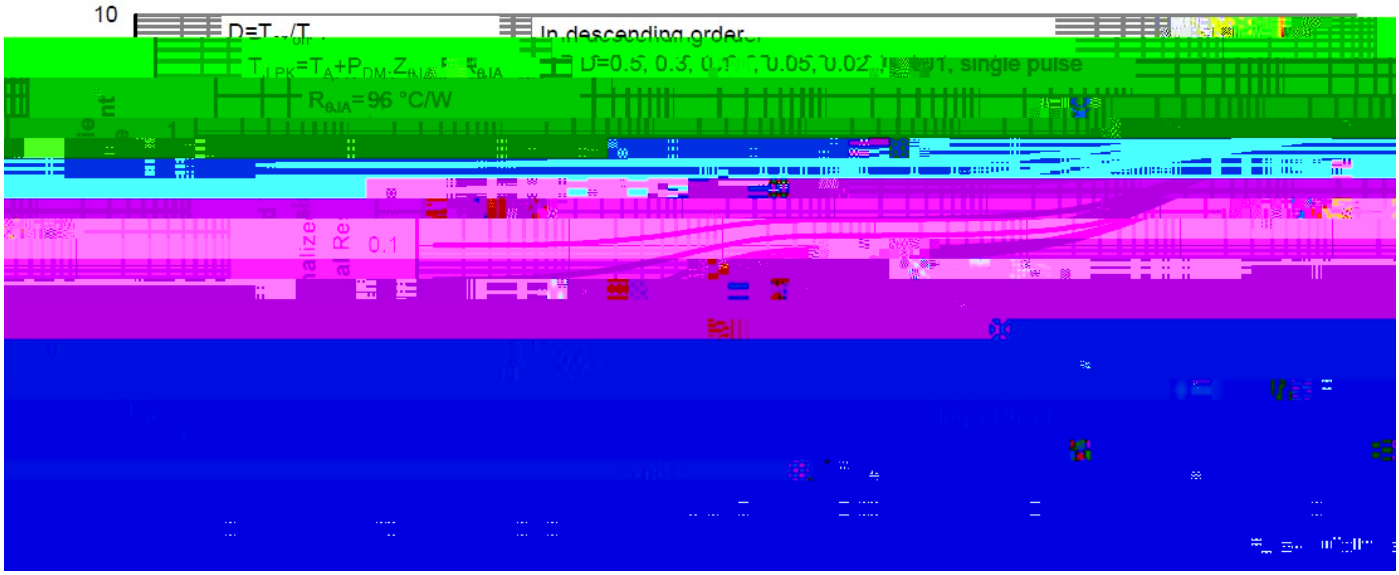
10
D=TON/T
In descending order
TJ,PK=TA+PDM·ZθJA·RθJA
D=0.5, 0.3, 0.1, 0.05, 0.02, 0.01, single pulse
RθJA=96 °C/W
1
0.1

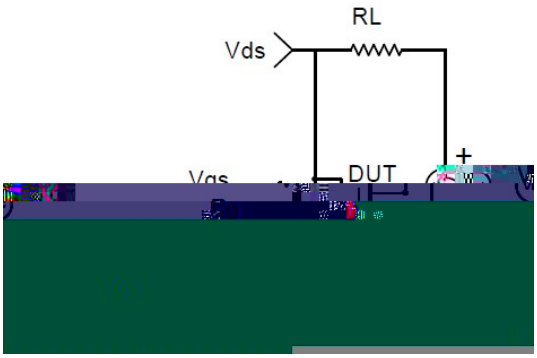
RL
Vds
Vgs
DUT
+

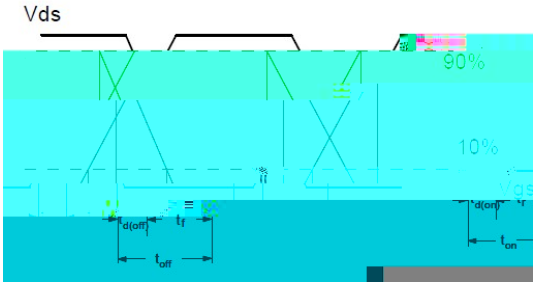
Vds
90%
10%
Vgs
td(off)
tf
toff
td(on)
ton

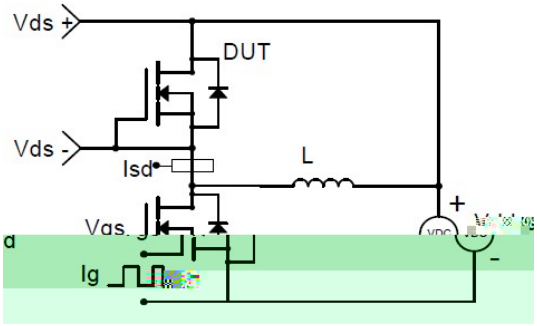
Vds +
DUT
Vds -
Isd
L
Vgs
Ig
VDC
+
-

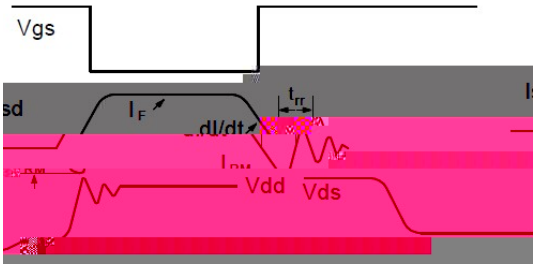
Vgs
IF
trr
dI/dt
Vdd
Vds

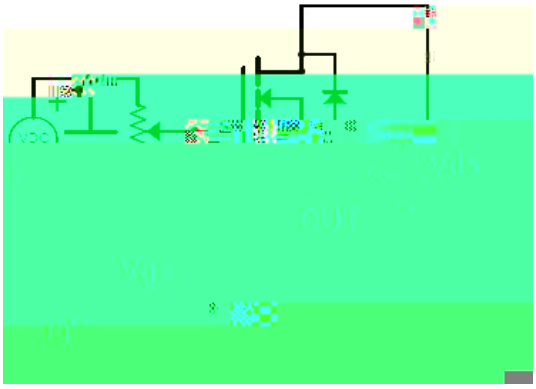
VDC
Vds
DUT
Vgs

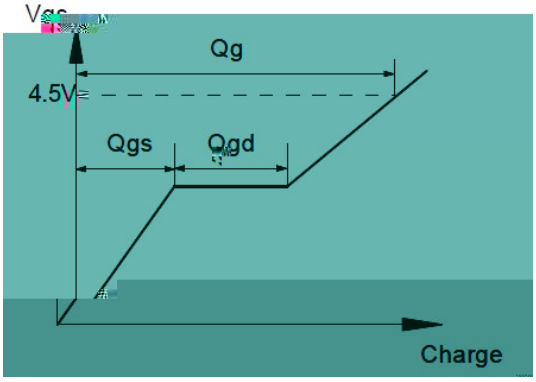
Vgs
Qg
4.5V
Qgs
Qgd
Charge

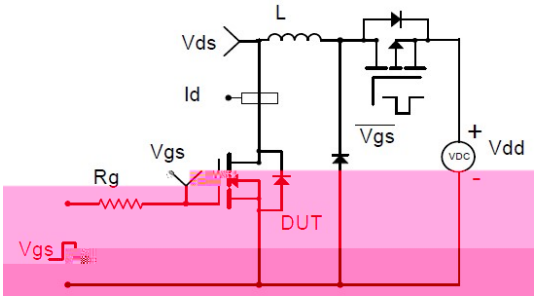
L
Vds
Id
Vgs
Rg
DUT
Vgs
VDC
+
Vdd
-

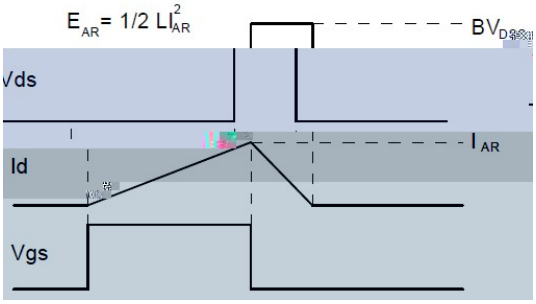
EAR = 1/2 LIAR2
BVDSS
Vds
Id
IAR
Vgs

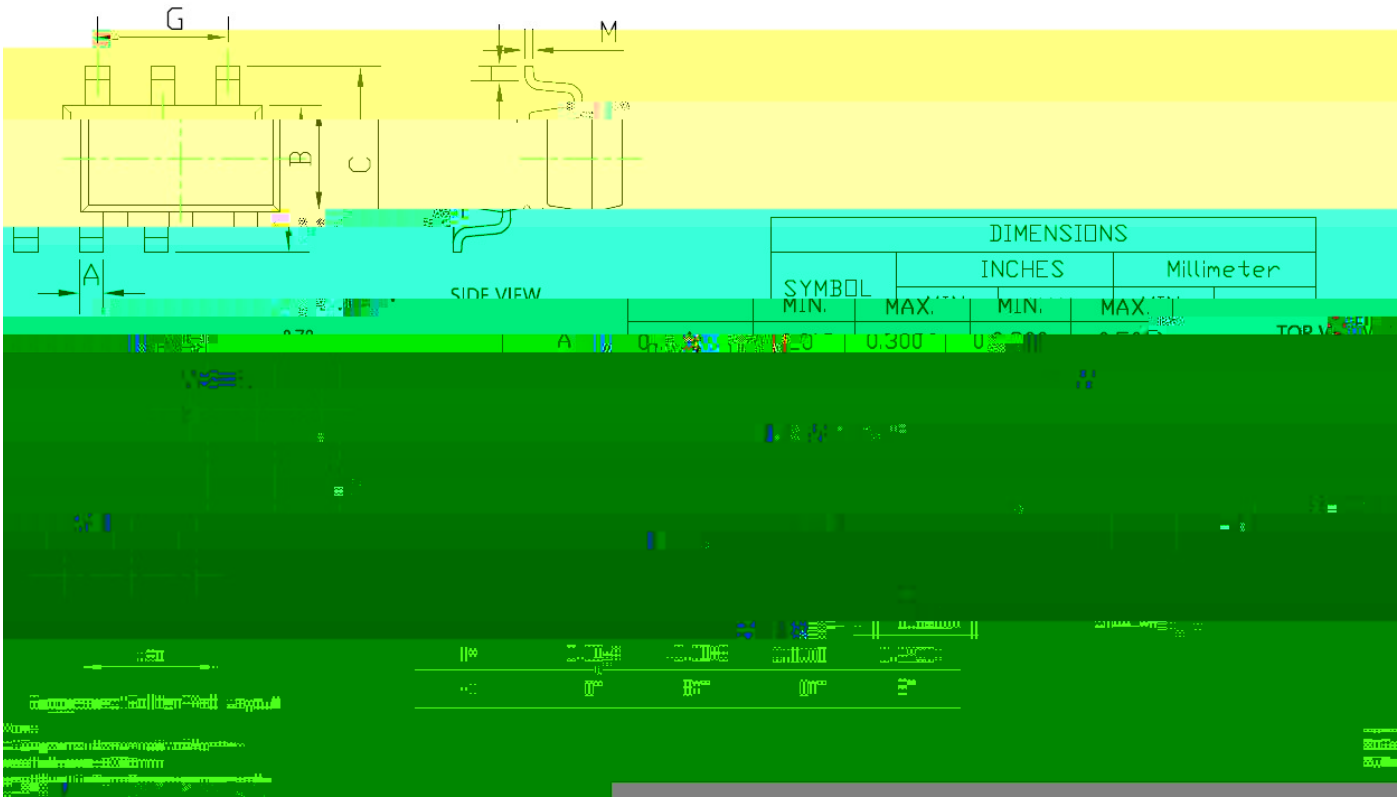
G
M
B
C
A
SIDE VIEW
TOP VIEW
DIMENSIONS
SYMBOL
INCHES
Millimeter
MIN.
MAX.
MIN.
MAX.
A
0.300