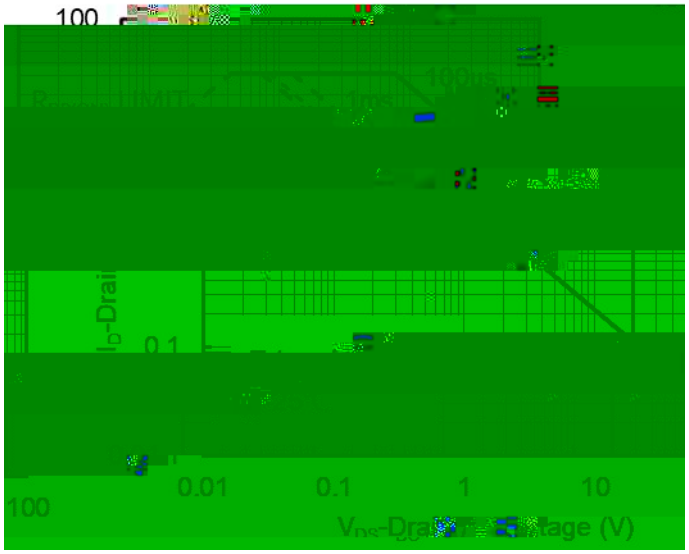
100
0.1
0.01
0.1
1
10
100

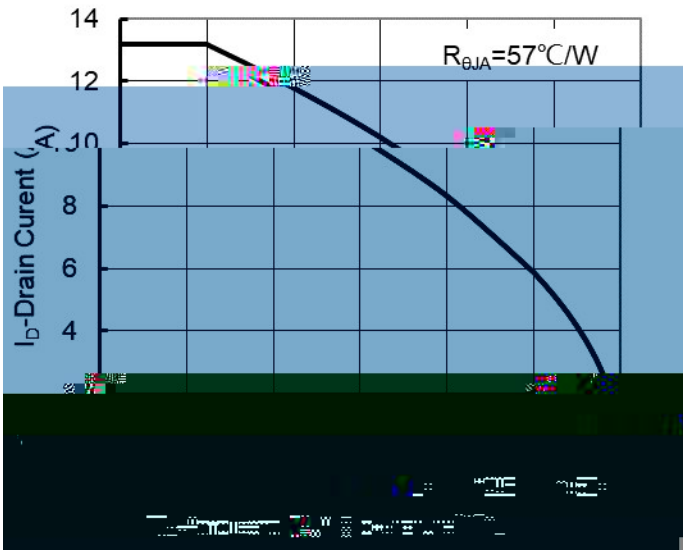
14
12
10
8
6
4
$R_{\theta JA}$=57°C/W
I_D-Drain Curent (A)

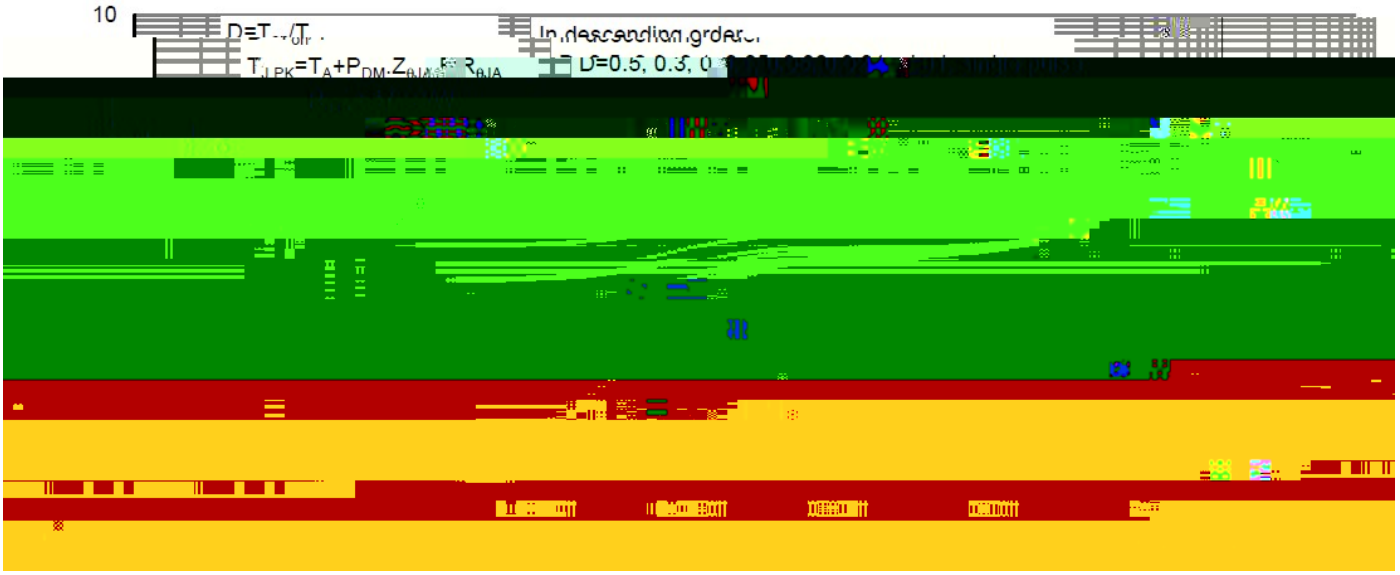
10
D=T1/T2
In descending order
$T_{J,PK}=T_A+P_{DM}.Z_{\theta JA}.R_{\theta JA}$
D=0.5, 0.3, 0

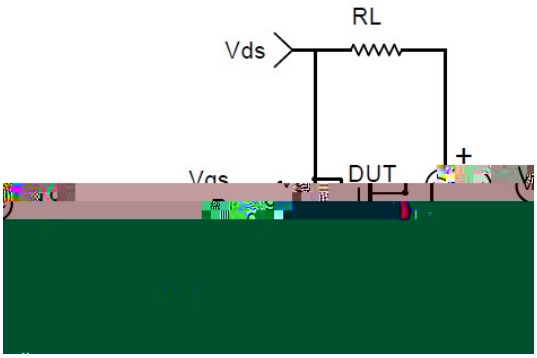
RL
Vds
Vgs
DUT
+

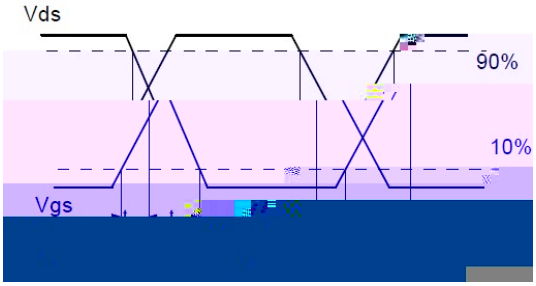
Vds
90%
10%
Vgs

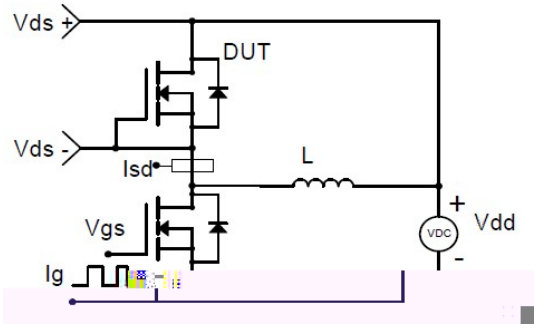
Vds +
DUT
Vds -
Isd
L
Vgs
Vdd
VDC
Ig

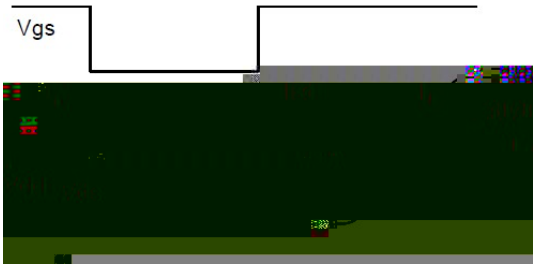
Vgs

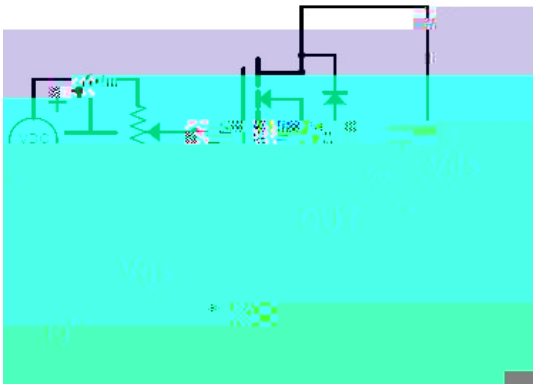

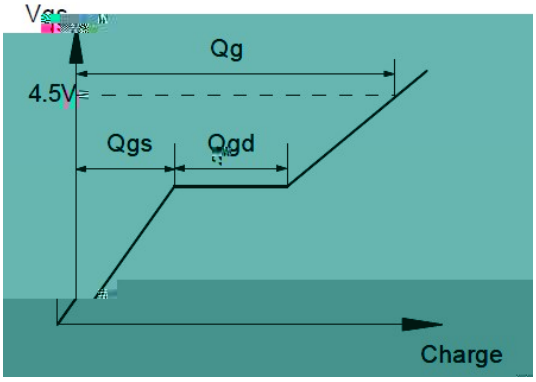
Qg
4.5V
Qgs
Qgd
Charge

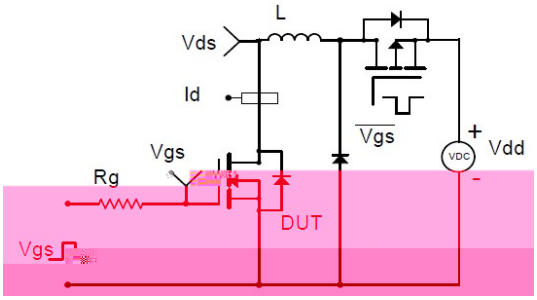
L
Vds
Id
Vgs
Rg
DUT
Vgs
Vdd
VDC

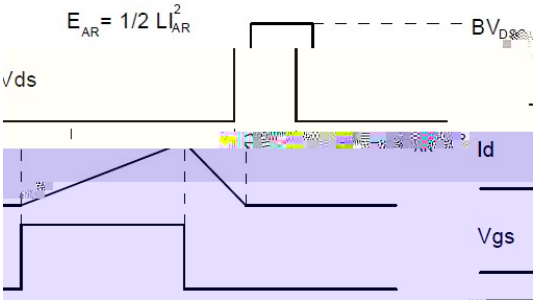
$E_{AR} = 1/2\ LI_{AR}^2$
BV_{DS}
Vds
Id
Vgs